Q-Model Series 400 Undercounter Flake Ice Machine

Manitowoc®

Q-Model Series 400
Undercounter Flake Ice Machine

- Up to 395 lbs. (179 kgs.) daily ice production.
- Only 26" (66.04 cm) wide cabinet.
- High efficiency bronze evaporator.
- Split collar evaporator support with shaft coupling ensures longer water seal and bearing life.
- Evaporator drain valve makes unit easier to clean; improves sanitation; and requires less maintenance.
- Patented cleaning technology.
- Q-Model styling displays a stainless steel exterior with the fit and finish of an appliance.
- Warranty
  2-year parts and labor coverage on all components. Additional 3-year (5-year total) parts coverage on ice machine compressor.

ISO 9001: 2000 Quality System Certified

America's #1 Selling Ice Machine

Ice Cube & Flake Machines • Ice Storage Bins • Ice Dispensers

Manitowoc Foodservice Group

Manitowoc Series 400 Undercounter Flake Ice Machine

Space-Saving Designs

Height	38.50"	97.8 cm
Width	26.00"	66.04 cm
Depth	26.50"	67.31 cm
Bin Storage	60 lbs.	27.2 kgs.

Height includes adjustable bin legs 6.00" to 7.00", (15.24 to 17.78 cm) set at 6.00" (15.24 cm).

Model	Ice shape	Ice production 24 hours Based on Air/Water Temp. 70°/50°F		90°/70°F		Power kWh/100 lbs.
QF-0406A	flake	395 lbs.	179 kgs.	300 lbs.	136 kgs.	5.32
Water usage/100 lbs./45.4 kgs. of Ice						
Potable Water: 12 gallons, 45.4 liters						

"A" following model number indicates "Air" condensing unit.
Test conditions are 90°F/32°C air, 70°F/21°C water, and 30 ± 3 psig water inlet pressure.

Ice Machine Electric

115/60/1. (230/50/1 also available.) 115/60/1 ice machines are factory pre-wired with a 6' (180 cm) power cord and NEMA 5-15P-plug configuration. 230/50/1 ice machines are factory pre-wired with a 6' (180 cm) power cord only, no plug is supplied.

Total ampacity: Air-cooled: 8.0 amps.

Maximum fuse size: Air-cooled: 15 amps.

HACR-type circuit breakers can be used in place of fuses.

Specifications

BTU Per Hour:
4,000 (average) 4,000 (peak)

Compressor:
Nominal rating: 1/3 HP

Refrigerant: R-404A

Operating Limits:
- Ambient Temperature Range: 45˚-110˚F (7.2˚-43.3˚C)
- Recommended Range: 60˚-100˚F (16˚-38˚C)
- Water Temperature Range: 45˚-90˚F (7.2˚-32.2˚C)
- Recommended Range: 55˚-80˚F (13˚-27˚C)
- Water Pressure Ice Maker Water In: Min. 20 psi (137.9 kPA) Max. 80 psi (551.1 kPA)

Bronze Evaporator

Heavy-duty, precision-machined, bronze evaporator offers superior heat-transfer capabilities for greater efficiency.

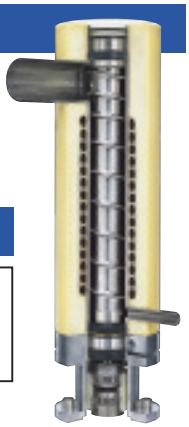

Front Access

Initiate ice, off and clean operations with simple upfront selector switch. No need to remove front panel.

Air Flow Front View

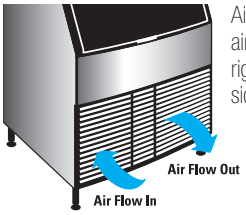

Air in left, air out right, no side vents.

Air Filter

Slides out from left side front without tools, easy to clean, reusable filter protects condenser from lint, grease and dust.

QF Series 400

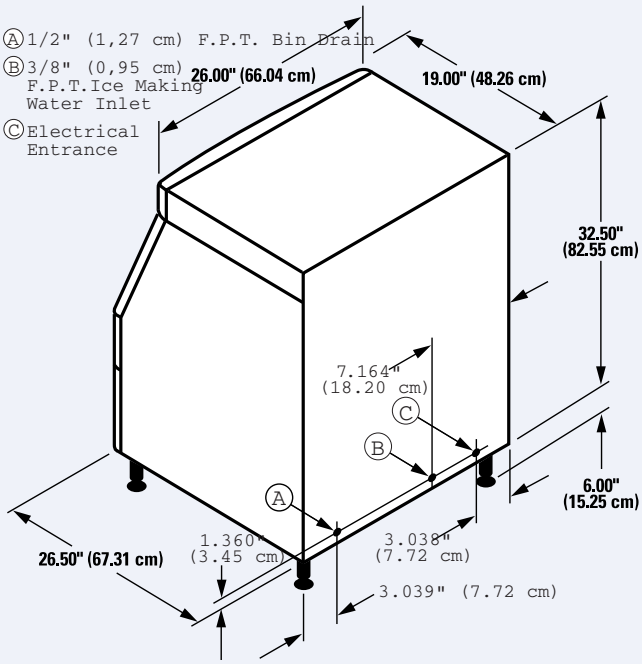

Installation Note - The QF Series 400 Undercounter Flake ice machine may be built into a cabinet. Access to the rear of the ice machine may be necessary for service procedures. Install with provisions that allow removal of the ice machine without disassembling the cabinet.

Ice Shape

Flake ice is small hard bits of ice ideally suited for presentation applications.

©2007 Manitowoc 7/07 Continuing product improvement may necessitate change of specifications without notice.

2297B

MANITOWOC ICE, INC.
2110 South 26th Street, P.O. Box 1720
Manitowoc, WI 54221-1720, USA
Ph: 920-682-0161 • Fax: 920-683-7589
Visit us online at www.manitowocice.com